MODEL XL6 - 230 V / 50 Hz

UNIT 1

ILLUSTRATED PARTS BREAKDOWN

From serial number: 21735000001

Rev.E - July 2015

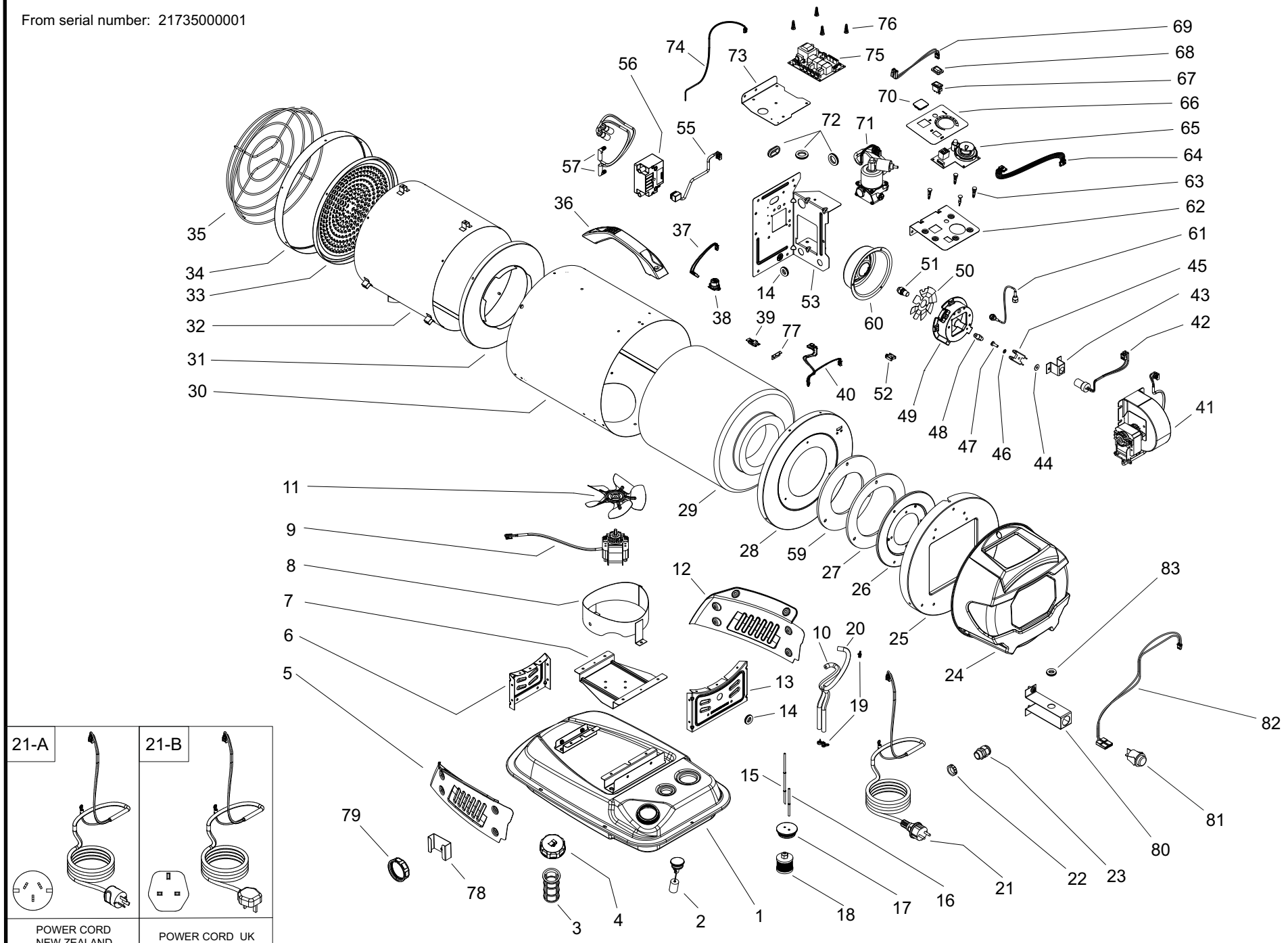

ESP00244

MODEL XL6 - 230 V / 50 Hz

UNIT 2 *PARTS LIST*

POS.	Code NR	Description	*Rev.E - July 2015*
1	4201.000	TANK COMPLETE	
2	4260.006	FUEL GAUGE	
3	4290.2oϕ	TANK FILTER	
4	4100.052	COMPLETE TANK CAP	
5	4201.013	LATERAL LEFT PANEL	
6	4201.007	FRONT BRACKET SHELL SUPPORT	
7	4201.064	MOTOR SUPPORT BRACKET	
8	4201.018	COMPLETE CONVEYOR	
9	4260.000	VENTILATION MOTOR WITH CABLE	
10	4201.061	FUEL PIPE IN PUMP-FILTER	
11	4201.065	FAN	
12	4201.011	LATERAL RIGHT PANEL	
13	4201.009	REAR BRACKET SHELL SUPPORT	
14	4290.052	BLACK PVC CABLE FEEDTHROUGH Ø18X2	
15	4260.059	FUEL PIPE IN	
16	4201.060	FUEL PIPE OUT	
17	4201.055	RUBBER BUSH	
18	4290.025	PAPER FILTER	
19	4290.027	CLAMPS HOSE	
20	4201.062	FUEL PIPE OUT PUMP-FILTER	
21	4201.079	POWER CORD SCHUKO	
21-A	4201.189	POWER CORD NEW ZEALAND	
21-B	4201.143	POWER CORD UK	
22	4290.047	LOCKNUT NYLON	
23	4290.046	STRAIN RELIEF BUSHING	
24	4201.331	COVER	
25	4201.077	REAR PLATE COMPLETE	
26	4201.031	FLANGE MOLDED	
27	4201.032	GASKET OF CERAMIC FIBER	
28	4201.082	BOTTOM PLATE	
29	4201.044	CHAMBER INSULATOR	
30	4201.021	SHELL	
31	4201.040	REAR COVER	
32	4201.081	COMBUSTION CHAMBER WITH BRACKET	
33	4201.045	HEATING PLATE	
34	4201.074	FRONT SHELL RING	
35	4201.046	FRONT GRILL	
36	4201.048	PLASTIC HANDLE	
37	4201.297	WIRE SENSOR TILTING	
38	4260.110	ANTI-TILTING SWITCH	
39	4мснϕфмл	OVER-HEAT THERMOSTAT 90°C	
40	4201.290	WIRE OVER-HEAT THERMOSTAT	
41	4260.003	MOTOR CENTRIFUGAL COMBUSTION	
42	4201.260	PHOTOCELL	
43	4201.259	PHOTOCELL BRACKET	
44	4290.012	WASHER CERAMIC FIBER	
45	4201.035	BIFILAR ELECTRODES	
46	4290.014	ELASTIC WASHER GROWER	
47	4290.013	SCREW	
48	4290.053	CONNECTION STRAIGHT	

MODEL XL6 - 230 V / 50 Hz

UNIT 3 *PARTS LIST*

POS.	Code NR	Description	*Rev.E - July 2015*
49	4201.033	BURNER HEAD	
50	4201.034	TURBO DISK	
51	4260.001	NOZZLE 0,40 GPH 80° H LE	
52	4290.058	PLASTIC CONDUIT	
53	4201.135	LATERAL PLATE SUPPORT	
55	4260.009	TRANSFORMER CABLE	
56	4260.004	TRANSFORMER	
57	4201.089	HIGH TENSION CABLE	
59	4201.139	GASKET OF CERAMIC FIBER	
60	4201.030	DIFFUSER	
61	4201.052	OIL SUPPLY	
62	4201.078	SUPPORT DISPLAY-BOARD	
63	4290.028	SPACER DISPLAY-BOARD	
64	4201.293	WIRE DISPLAY PC-BOARD	
65	4201.263	DISPLAY BOARD	
66	4201.069	FRONT LABEL	
67	4290.029	ROCKER SWITCH 10A	
68	4290.030	COVER SWITCH	
69	4201.289	WIRE ROCKER SWITCH	
70	4201.068	COVER DISPLAY	
71	4260.002	SOLENOID PUMP	
72	4290.003	CABLE FEEDTHROUGH	
73	4201.027	PLATE SUPPORT	
74	4201.093	WIRE SENSOR TEMPERATURE	
75	4201.329	PC BOARD	
76	4290.021	SPACER PC-BOARD	
77	4201.199	THERMOSTAT BRACKET	
78	4201.322	BRACKET FOR RED CAP	
79	4260.119	RED CAP FOR SHIPPING USE ONLY	
80	4201.327	RESET BUTTON BRACKET	
81	4260.233	RESET PUSH-BUTTON	
82	4201.330	RESET WIRE	
83	4290.052	STRAIN RELIEF	

RECOMMENDED SPARE PARTS

POS.	Code NR	Description	*Rev.E - July 2015*
3	4290.2оф	TANK FILTER	
9	4260.000	VENTILATION MOTOR WITH CABLE	
10	4201.061	FUEL PIPE IN PUMP-FILTER	
20	4201.062	FUEL PIPE OUT PUMP-FILTER	
29	4201.044	CHAMBER INSULATOR	
38	4260.110	ANTI-TILTING SWITCH	
39	4мснфмл	OVER-HEAT THERMOSTAT 90°C	
41	4260.003	MOTOR CENTRIFUGAL COMBUSTION	
51	4260.001	NOZZLE 0,40 GPH 80° H LE	
56	4260.004	TRANSFORMER	
65	4201.263	DISPLAY BOARD	
71	4260.002	SOLENOID PUMP	
75	4201.329	PC BOARD	

MODEL XL6

UNIT 1 **ILLUSTRATED PARTS BREAKDOWN**

From serial number: 21734000000

Rev.D - May 2014

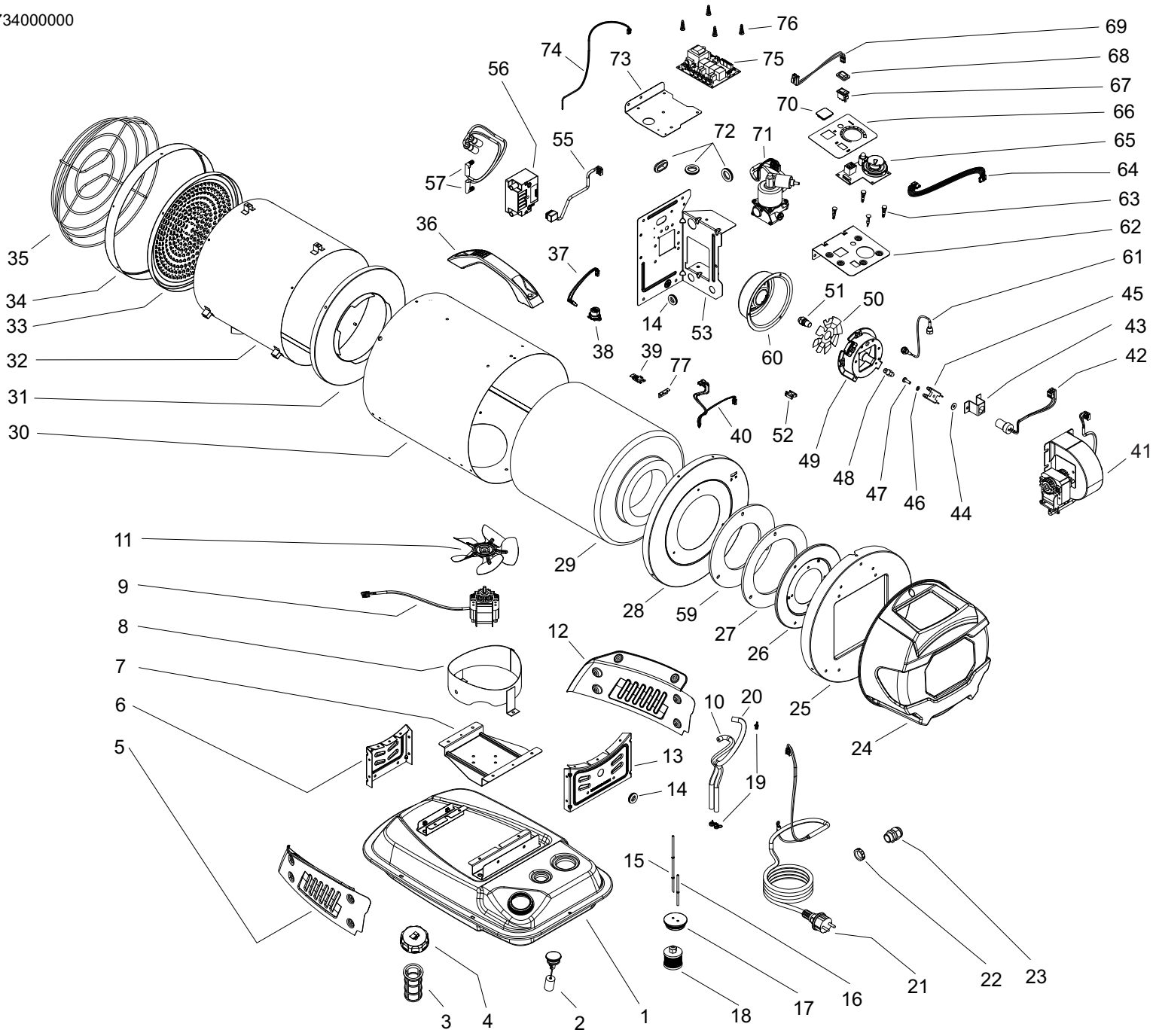

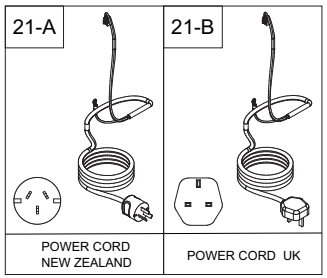

ESP00244

POS.	Code NR	Description	*Rev.D - May 2014*
1	4201.000	TANK COMPLETE	
2	4260.006	FUEL GAUGE	
3	4290.026	TANK FILTER	
4	4100.052	COMPLETE TANK CAP	
5	4201.013	LATERAL LEFT PANEL	
6	4201.007	FRONT BRACKET SHELL SUPPORT	
7	4201.064	MOTOR SUPPORT BRACKET	
8	4201.018	COMPLETE CONVEYOR	
9	4260.000	VENTILATION MOTOR WITH CABLE	
10	4201.061	FUEL PIPE IN PUMP-FILTER	
11	4201.065	FAN	
12	4201.011	LATERAL RIGHT PANEL	
13	4201.009	REAR BRACKET SHELL SUPPORT	
14	4290.052	BLACK PVC CABLE FEEDTHROUGH Ø18X2	
15	4201.059	FUEL PIPE IN	
16	4201.060	FUEL PIPE OUT	
17	4201.055	RUBBER BUSH	
18	4290.025	PAPER FILTER	
19	4290.027	CLAMPS HOSE	
20	4201.062	FUEL PIPE OUT PUMP-FILTER	
21	4201.079	POWER CORD SCHUKO	
21-A	4201.189	POWER CORD NEW ZEALAND	
21-B	4201.143	POWER CORD UK	
22	4290.047	LOCKNUT NYLON	
23	4290.046	STRAIN RELIEF BUSHING	
24	4201.049	COVER	
25	4201.077	REAR PLATE COMPLETE	
26	4201.031	FLANGE MOLDED	
27	4201.032	GASKET OF CERAMIC FIBER	
28	4201.082	BOTTOM PLATE	
29	4201.044	CHAMBER INSULATOR	
30	4201.021	SHELL	
31	4201.040	REAR COVER	
32	4201.081	COMBUSTION CHAMBER WITH BRACKET	
33	4201.045	HEATING PLATE	
34	4201.074	FRONT SHELL RING	
35	4201.046	FRONT GRILL	
36	4201.048	PLASTIC HANDLE	
37	4201.297	WIRE SENSOR TILTING	
38	4260.110	ANTI-TILTING SWITCH	
39	4260.109	OVER-HEAT THERMOSTAT 90°C	
40	4201.290	WIRE OVER-HEAT THERMOSTAT	
41	4260.003	MOTOR CENTRIFUGAL COMBUSTION	
42	4201.260	PHOTOCELL	
43	4201.259	PHOTOCELL BRACKET	
44	4290.012	WASHER CERAMIC FIBER	
45	4201.035	BIFILAR ELECTRODES	
46	4290.014	ELASTIC WASHER GROWER	
47	4290.013	SCREW	
48	4290.053	CONNECTION STRAIGHT	

POS.	Code NR	Description	*Rev.D - May 2014*
49	4201.033	BURNER HEAD	
50	4201.034	TURBO DISK	
51	4260.001	NOZZLE 0,40 GPH 80° H LE	
52	4290.058	PLASTIC CONDUIT	
53	4201.135	LATERAL PLATE SUPPORT	
55	4260.009	TRANSFORMER CABLE	
56	4260.004	TRANSFORMER	
57	4201.089	HIGH TENSION CABLE	
59	4201.139	GASKET OF CERAMIC FIBER	
60	4201.030	DIFFUSER	
61	4201.052	OIL SUPPLY	
62	4201.078	SUPPORT DISPLAY-BOARD	
63	4290.028	SPACER DISPLAY-BOARD	
64	4201.293	WIRE DISPLAY PC-BOARD	
65	4201.263	DISPLAY BOARD	
66	4201.069	FRONT LABEL	
67	4290.029	ROCKER SWITCH 10A	
68	4290.030	COVER SWITCH	
69	4201.289	WIRE ROCKER SWITCH	
70	4201.068	COVER DISPLAY	
71	4260.002	SOLENOID PUMP	
72	4290.003	CABLE FEEDTHROUGH	
73	4201.027	PLATE SUPPORT	
74	4201.093	WIRE SENSOR TEMPERATURE	
75	4201.258	PC BOARD	
76	4290.021	SPACER PC-BOARD	
77	4201.199	THERMOSTAT BRACKET	

RECOMMENDED SPARE PARTS

POS.	Code NR	Description	*Rev.D - May 2014*
3	4290.026	TANK FILTER	
9	4260.000	VENTILATION MOTOR WITH CABLE	
10	4201.061	FUEL PIPE IN PUMP-FILTER	
20	4201.062	FUEL PIPE OUT PUMP-FILTER	
29	4201.044	CHAMBER INSULATOR	
38	4260.110	ANTI-TILTING SWITCH	
39	4260.109	OVER-HEAT THERMOSTAT 90°C	
41	4260.003	MOTOR CENTRIFUGAL COMBUSTION	
51	4260.001	NOZZLE 0,40 GPH 80° H LE	
56	4260.004	TRANSFORMER	
65	4201.263	DISPLAY BOARD	
71	4260.002	SOLENOID PUMP	
75	4201.258	PC BOARD	

MODEL XL6

UNIT 1 **ILLUSTRATED PARTS BREAKDOWN**

From serial number: 21733002401

Until serial number: 21733006290

Rev.C - May 2013

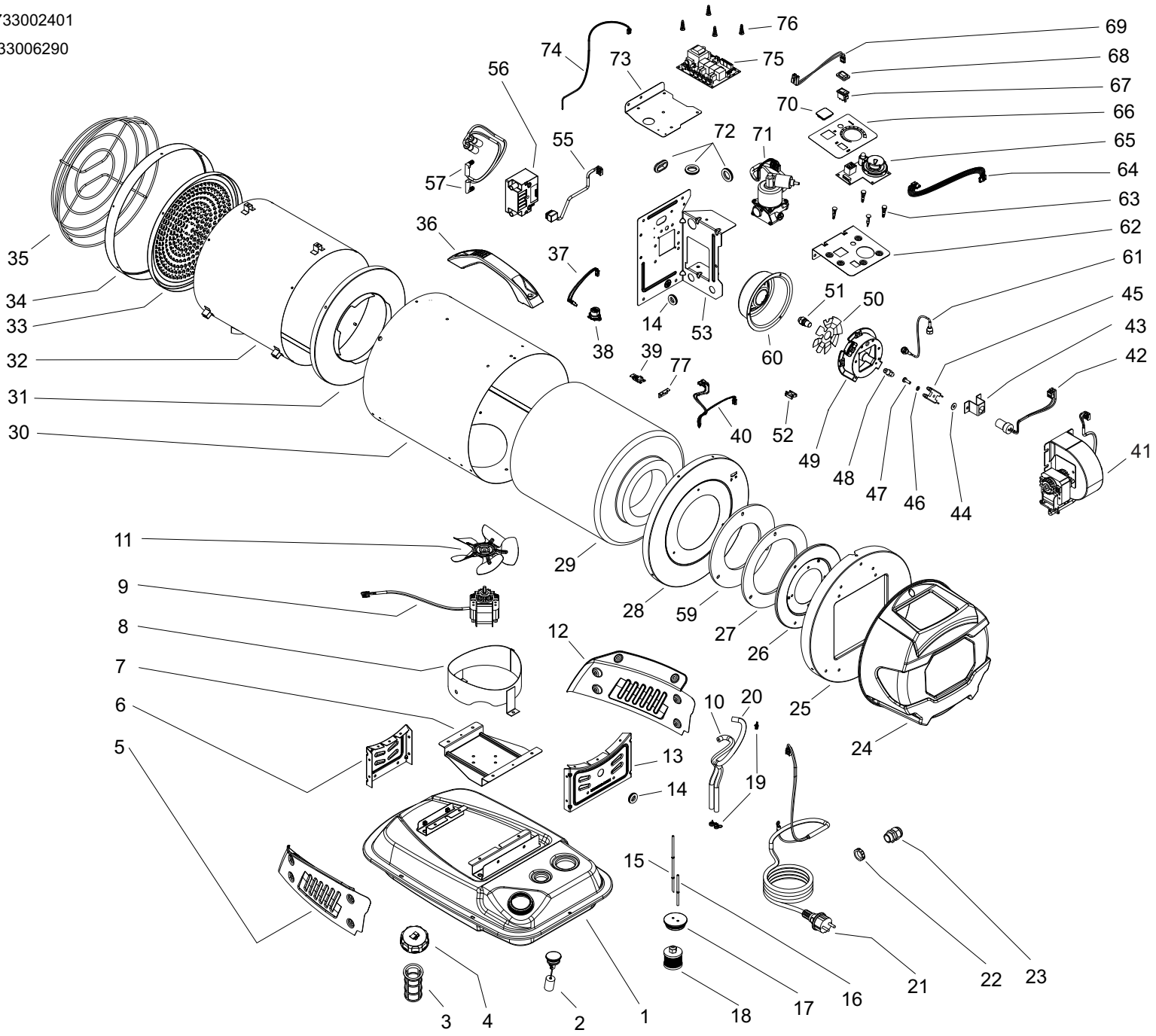

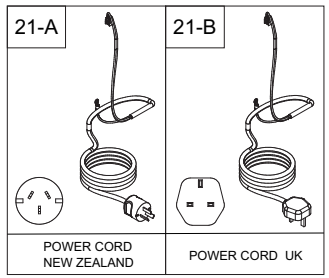

ESP00244

POS.	Code NR	Description	*Rev.B - May 2013*
1	4201.000	TANK COMPLETE	
2	4260.006	FUEL GAUGE	
3	4290.026	TANK FILTER	
4	4260.007	COMPLETE TANK CAP	
5	4201.013	LATERAL LEFT PANEL	
6	4201.007	FRONT BRACKET SHELL SUPPORT	
7	4201.064	MOTOR SUPPORT BRACKET	
8	4201.018	COMPLETE CONVEYOR	
9	4260.000	VENTILATION MOTOR WITH CABLE	
10	4201.061	FUEL PIPE IN PUMP-FILTER	
11	4201.065	FAN	
12	4201.011	LATERAL RIGHT PANEL	
13	4201.009	REAR BRACKET SHELL SUPPORT	
14	4290.052	BLACK PVC CABLE FEEDTHROUGH Ø18X2	
15	4201.059	FUEL PIPE IN	
16	4201.060	FUEL PIPE OUT	
17	4201.055	RUBBER BUSH	
18	4290.025	PAPER FILTER	
19	4290.027	CLAMPS HOSE	
20	4201.062	FUEL PIPE OUT PUMP-FILTER	
21	4201.079	POWER CORD SCHUKO	
21-A	4201.189	POWER CORD NEW ZEALAND	
21-B	4201.143	POWER CORD UK	
22	4290.047	LOCKNUT NYLON	
23	4290.046	STRAIN RELIEF BUSHING	
24	4201.049	COVER	
25	4201.077	REAR PLATE COMPLETE	
26	4201.031	FLANGE MOLDED	
27	4201.032	GASKET OF CERAMIC FIBER	
28	4201.082	BOTTOM PLATE	
29	4201.044	CHAMBER INSULATOR	
30	4201.021	SHELL	
31	4201.040	REAR COVER	
32	4201.081	COMBUSTION CHAMBER WITH BRACKET	
33	4201.045	HEATING PLATE	
34	4201.074	FRONT SHELL RING	
35	4201.046	FRONT GRILL	
36	4201.048	PLASTIC HANDLE	
37	4201.200	WIRE SENSOR TILTING	
38	4260.110	ANTI-TILTING SWITCH	
39	4260.109	OVER-HEAT THERMOSTAT 90°C	
40	4201.201	WIRE OVER-HEAT THERMOSTAT	
41	4260.003	MOTOR CENTRIFUGAL COMBUSTION	
42	4201.056	PHOTOCELL	
43	4201.037	PHOTOCELL BRACKET	
44	4290.012	WASHER CERAMIC FIBER	
45	4201.035	BIFILAR ELECTRODES	
46	4290.014	ELASTIC WASHER GROWER	
47	4290.013	SCREW	
48	4290.053	CONNECTION STRAIGHT	

POS.	Code NR	Description	*Rev.B - May 2013*
49	4201.033	BURNER HEAD	
50	4201.034	TURBO DISK	
51	4260.001	NOZZLE 0,40 GPH 80° H LE	
52	4290.058	PLASTIC CONDUIT	
53	4201.135	LATERAL PLATE SUPPORT	
55	4260.009	TRANSFORMER CABLE	
56	4260.004	TRANSFORMER	
57	4201.089	HIGH TENSION CABLE	
59	4201.139	GASKET OF CERAMIC FIBER	
60	4201.030	DIFFUSER	
61	4201.052	OIL SUPPLY	
62	4201.078	SUPPORT DISPLAY-BOARD	
63	4290.028	SPACER DISPLAY-BOARD	
64	4201.094	WIRE DISPLAY PC-BOARD	
65	4201.066	DISPLAY BOARD	
66	4201.069	FRONT LABEL	
67	4290.029	ROCKER SWITCH 10A	
68	4290.030	COVER SWITCH	
69	4201.092	WIRE ROCKER SWITCH	
70	4201.068	COVER DISPLAY	
71	4260.002	SOLENOID PUMP	
72	4290.003	CABLE FEEDTHROUGH	
73	4201.027	PLATE SUPPORT	
74	4201.093	WIRE SENSOR TEMPERATURE	
75	4201.051	PC BOARD	
76	4290.021	SPACER PC-BOARD	
77	4201.199	THERMOSTAT BRACKET	

RECOMMENDED SPARE PARTS

POS.	Code NR	Description	*Rev.B - May 2013*
3	4290.026	TANK FILTER	
9	4260.000	VENTILATION MOTOR WITH CABLE	
10	4201.061	FUEL PIPE IN PUMP-FILTER	
20	4201.062	FUEL PIPE OUT PUMP-FILTER	
29	4201.044	CHAMBER INSULATOR	
38	4260.110	ANTI-TILTING SWITCH	
39	4260.109	OVER-HEAT THERMOSTAT 90°C	
41	4260.003	MOTOR CENTRIFUGAL COMBUSTION	
51	4260.001	NOZZLE 0,40 GPH 80° H LE	
56	4260.004	TRANSFORMER	
65	4201.066	DISPLAY BOARD	
71	4260.002	SOLENOID PUMP	
75	4201.051	PC BOARD	

MODEL XL6

UNIT 1 **ILLUSTRATED PARTS BREAKDOWN**

From serial number: 2173001921

Until serial number: 2173002400

Rev.B - May 2013

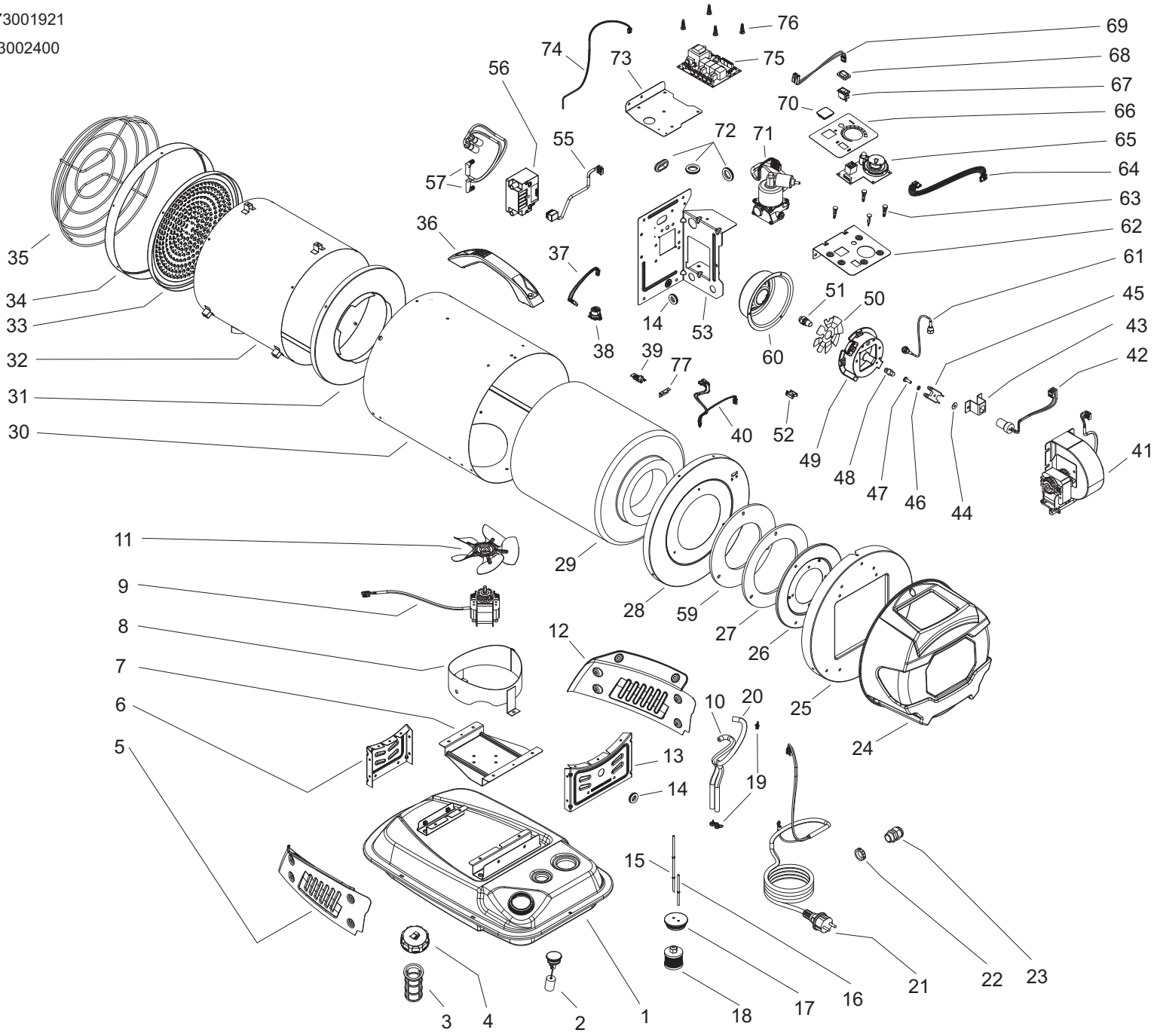

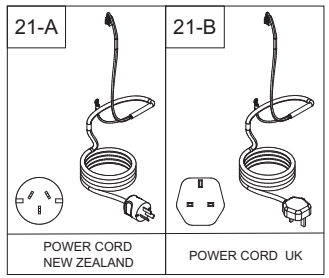

ESP00244

MODEL XL6

UNIT 2 *PARTS LIST*

POS.	Code NR	Description	*Rev.B - May 2013*
1	4201.000	TANK COMPLETE	
2	4260.006	FUEL GAUGE	
3	4290.026	TANK FILTER	
4	4260.007	COMPLETE TANK CAP	
5	4201.013	LATERAL LEFT PANEL	
6	4201.007	FRONT BRACKET SHELL SUPPORT	
7	4201.064	MOTOR SUPPORT BRACKET	
8	4201.018	COMPLETE CONVEYOR	
9	4260.000	VENTILATION MOTOR WITH CABLE	
10	4201.061	FUEL PIPE IN PUMP-FILTER	
11	4201.065	FAN	
12	4201.011	LATERAL RIGHT PANEL	
13	4201.009	REAR BRACKET SHELL SUPPORT	
14	4290.052	BLACK PVC CABLE FEEDTHROUGH Ø18X2	
15	4201.059	FUEL PIPE IN	
16	4201.060	FUEL PIPE OUT	
17	4201.055	RUBBER BUSH	
18	4290.025	PAPER FILTER	
19	4290.027	CLAMPS HOSE	
20	4201.062	FUEL PIPE OUT PUMP-FILTER	
21	4201.079	POWER CORD SCHUKO	
21-A	4201.189	POWER CORD NEW ZEALAND	
21-B	4201.143	POWER CORD UK	
22	4290.047	LOCKNUT NYLON	
23	4290.046	STRAIN RELIEF BUSHING	
24	4201.049	COVER	
25	4201.077	REAR PLATE COMPLETE	
26	4201.031	FLANGE MOLDED	
27	4201.032	GASKET OF CERAMIC FIBER	
28	4201.082	BOTTOM PLATE	
29	4201.044	CHAMBER INSULATOR	
30	4201.021	SHELL	
31	4201.040	REAR COVER	
32	4201.081	COMBUSTION CHAMBER WITH BRACKET	
33	4201.045	HEATING PLATE	
34	4201.074	FRONT SHELL RING	
35	4201.046	FRONT GRILL	
36	4201.048	PLASTIC HANDLE	
37	4201.080	WIRE SENSOR TILTING	
38	4260.110	ANTI-TILTING SWITCH	
39	4260.109	OVER-HEAT THERMOSTAT 90°C	
40	4201.201	WIRE OVER-HEAT THERMOSTAT	
41	4260.003	MOTOR CENTRIFUGAL COMBUSTION	
42	4201.056	PHOTOCELL	
43	4201.037	PHOTOCELL BRACKET	
44	4290.012	WASHER CERAMIC FIBER	
45	4201.035	BIFILAR ELECTRODES	
46	4290.014	ELASTIC WASHER GROWER	
47	4290.013	SCREW	
48	4290.053	CONNECTION STRAIGHT	

POS.	Code NR	Description	*Rev.B - May 2013*
49	4201.033	BURNER HEAD	
50	4201.034	TURBO DISK	
51	4260.001	NOZZLE 0,40 GPH 80° H LE	
52	4290.058	PLASTIC CONDUIT	
53	4201.135	LATERAL PLATE SUPPORT	
55	4260.009	TRANSFORMER CABLE	
56	4260.004	TRANSFORMER	
57	4201.089	HIGH TENSION CABLE	
59	4201.139	GASKET OF CERAMIC FIBER	
60	4201.030	DIFFUSER	
61	4201.052	OIL SUPPLY	
62	4201.078	SUPPORT DISPLAY-BOARD	
63	4290.028	SPACER DISPLAY-BOARD	
64	4201.094	WIRE DISPLAY PC-BOARD	
65	4201.066	DISPLAY BOARD	
66	4201.069	FRONT LABEL	
67	4290.029	ROCKER SWITCH 10A	
68	4290.030	COVER SWITCH	
69	4201.092	WIRE ROCKER SWITCH	
70	4201.068	COVER DISPLAY	
71	4260.002	SOLENOID PUMP	
72	4290.003	CABLE FEEDTHROUGH	
73	4201.027	PLATE SUPPORT	
74	4201.093	WIRE SENSOR TEMPERATURE	
75	4201.051	PC BOARD	
76	4290.021	SPACER PC-BOARD	
77	4201.199	THERMOSTAT BRACKET	

RECOMMENDED SPARE PARTS

POS.	Code NR	Description	*Rev.B - May 2013*
3	4290.026	TANK FILTER	
9	4260.000	VENTILATION MOTOR WITH CABLE	
10	4201.061	FUEL PIPE IN PUMP-FILTER	
20	4201.062	FUEL PIPE OUT PUMP-FILTER	
29	4201.044	CHAMBER INSULATOR	
38	4260.005	ANTI-TILTING SWITCH	
39	4260.109	OVER-HEAT THERMOSTAT 90°C	
41	4260.003	MOTOR CENTRIFUGAL COMBUSTION	
51	4260.001	NOZZLE 0,40 GPH 80° H LE	
56	4260.004	TRANSFORMER	
65	4201.066	DISPLAY BOARD	
71	4260.002	SOLENOID PUMP	
75	4201.051	PC BOARD	

MODEL XL6

UNIT 1

ILLUSTRATED PARTS BREAKDOWN

From serial number: 2173000000

Until serial number: 2173001920

Rev.A - Mar. 2013

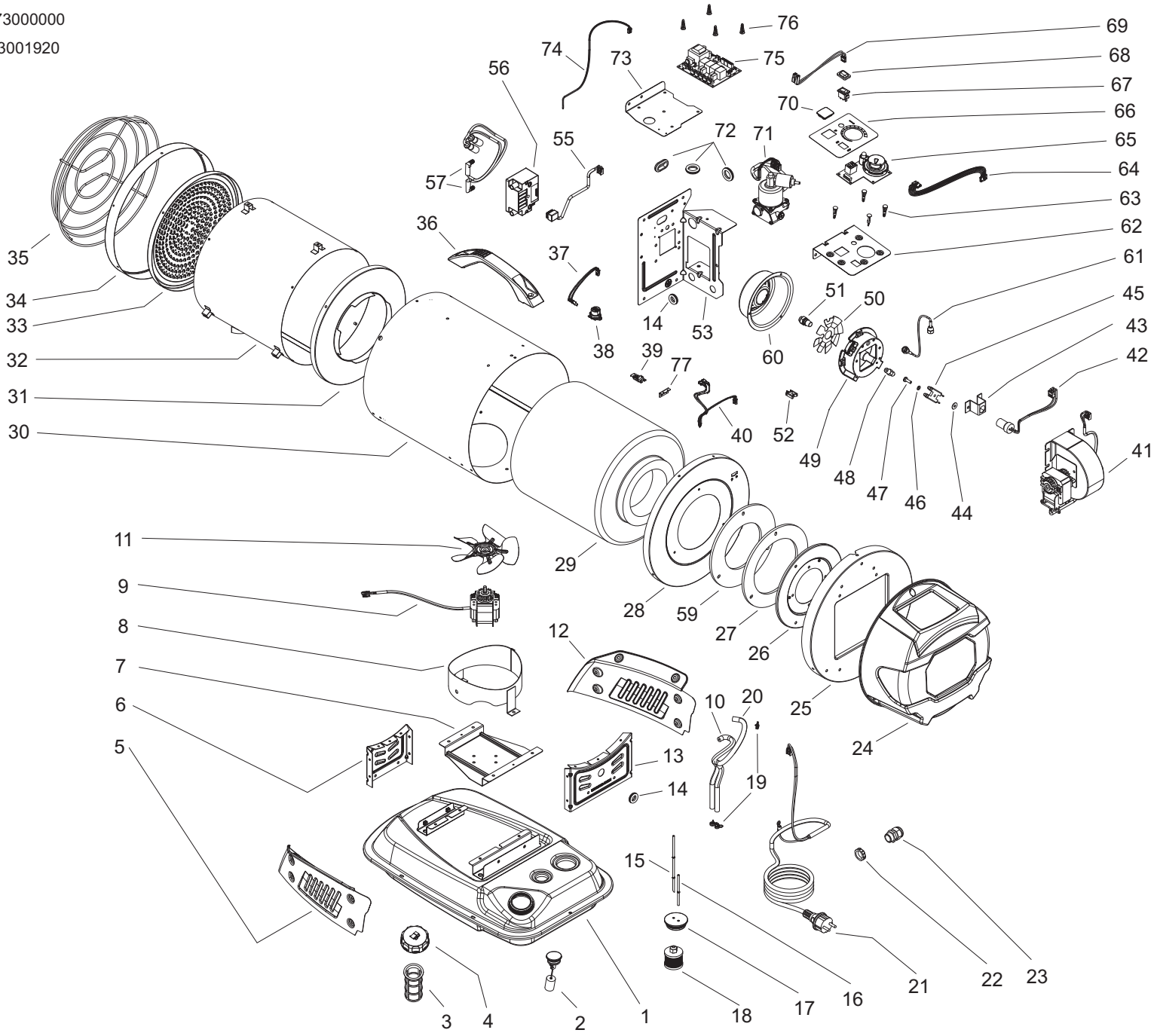

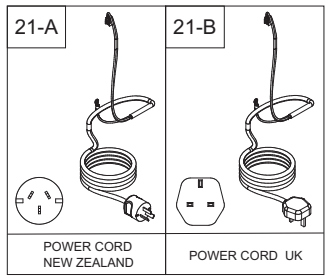

ESP00244

MODEL XL6

UNIT 2 *PARTS LIST*

POS.	Code NR	Description	*Rev.A - Mar. 2013*
1	4201.000	TANK COMPLETE	
2	4260.006	FUEL GAUGE	
3	4290.026	TANK FILTER	
4	4260.007	COMPLETE TANK CAP	
5	4201.013	LATERAL LEFT PANEL	
6	4201.007	FRONT BRACKET SHELL SUPPORT	
7	4201.064	MOTOR SUPPORT BRACKET	
8	4201.018	COMPLETE CONVEYOR	
9	4260.000	VENTILATION MOTOR WITH CABLE	
10	4201.061	FUEL PIPE IN PUMP-FILTER	
11	4201.065	FAN	
12	4201.011	LATERAL RIGHT PANEL	
13	4201.009	REAR BRACKET SHELL SUPPORT	
14	4290.052	BLACK PVC CABLE FEEDTHROUGH Ø18X2	
15	4201.059	FUEL PIPE IN	
16	4201.060	FUEL PIPE OUT	
17	4201.055	RUBBER BUSH	
18	4290.025	PAPER FILTER	
19	4290.027	CLAMPS HOSE	
20	4201.062	FUEL PIPE OUT PUMP-FILTER	
21	4201.079	POWER CORD SCHUKO	
21-A	4201.189	POWER CORD NEW ZEALAND	
21-B	4201.143	POWER CORD UK	
22	4290.047	LOCKNUT NYLON	
23	4290.046	STRAIN RELIEF BUSHING	
24	4201.049	COVER	
25	4201.077	REAR PLATE COMPLETE	
26	4201.031	FLANGE MOLDED	
27	4201.032	GASKET OF CERAMIC FIBER	
28	4201.082	BOTTOM PLATE	
29	4201.044	CHAMBER INSULATOR	
30	4201.021	SHELL	
31	4201.040	REAR COVER	
32	4201.081	COMBUSTION CHAMBER WITH BRACKET	
33	4201.045	HEATING PLATE	
34	4201.074	FRONT SHELL RING	
35	4201.046	FRONT GRILL	
36	4201.048	PLASTIC HANDLE	
37	4201.200	WIRE SENSOR TILTING	
38	4260.110	ANTI-TILTING SWITCH	
39	4260.109	OVER-HEAT THERMOSTAT 90°C	
40	4201.201	WIRE OVER-HEAT THERMOSTAT	
41	4260.003	MOTOR CENTRIFUGAL COMBUSTION	
42	4201.056	PHOTOCELL	
43	4201.037	PHOTOCELL BRACKET	
44	4290.012	WASHER CERAMIC FIBER	
45	4201.035	BIFILAR ELECTRODES	
46	4290.014	ELASTIC WASHER GROWER	
47	4290.013	SCREW	
48	4290.053	CONNECTION STRAIGHT	

POS.	Code NR	Description	*Rev.A - Mar. 2013*
49	4201.033	BURNER HEAD	
50	4201.034	TURBO DISK	
51	4260.001	NOZZLE 0,40 GPH 80° H LE	
52	4290.058	PLASTIC CONDUIT	
53	4201.135	LATERAL PLATE SUPPORT	
55	4260.009	TRANSFORMER CABLE	
56	4260.004	TRANSFORMER	
57	4201.089	HIGH TENSION CABLE	
59	4201.139	GASKET OF CERAMIC FIBER	
60	4201.030	DIFFUSER	
61	4201.052	OIL SUPPLY	
62	4201.078	SUPPORT DISPLAY-BOARD	
63	4290.028	SPACER DISPLAY-BOARD	
64	4201.094	WIRE DISPLAY PC-BOARD	
65	4201.066	DISPLAY BOARD	
66	4201.069	FRONT LABEL	
67	4290.029	ROCKER SWITCH 10A	
68	4290.030	COVER SWITCH	
69	4201.092	WIRE ROCKER SWITCH	
70	4201.068	COVER DISPLAY	
71	4260.002	SOLENOID PUMP	
72	4290.003	CABLE FEEDTHROUGH	
73	4201.027	PLATE SUPPORT	
74	4201.093	WIRE SENSOR TEMPERATURE	
75	4201.051	PC BOARD	
76	4290.021	SPACER PC-BOARD	
77	4201.199	THERMOSTAT BRACKET	

RECOMMENDED SPARE PARTS

POS.	Code NR	Description	*Rev.A - Mar. 2013*
3	4290.026	TANK FILTER	
9	4260.000	VENTILATION MOTOR WITH CABLE	
10	4201.061	FUEL PIPE IN PUMP-FILTER	
20	4201.062	FUEL PIPE OUT PUMP-FILTER	
29	4201.044	CHAMBER INSULATOR	
38	4260.110	ANTI-TILTING SWITCH	
39	4260.109	OVER-HEAT THERMOSTAT 90°C	
41	4260.003	MOTOR CENTRIFUGAL COMBUSTION	
51	4260.001	NOZZLE 0,40 GPH 80° H LE	
56	4260.004	TRANSFORMER	
65	4201.066	DISPLAY BOARD	
71	4260.002	SOLENOID PUMP	
75	4201.051	PC BOARD	

MODEL XL6

UNIT 1 **ILLUSTRATED PARTS BREAKDOWN**

From serial number: 7213200000

Unitl serial number: 7213205371

Rev. Emission - June 2012

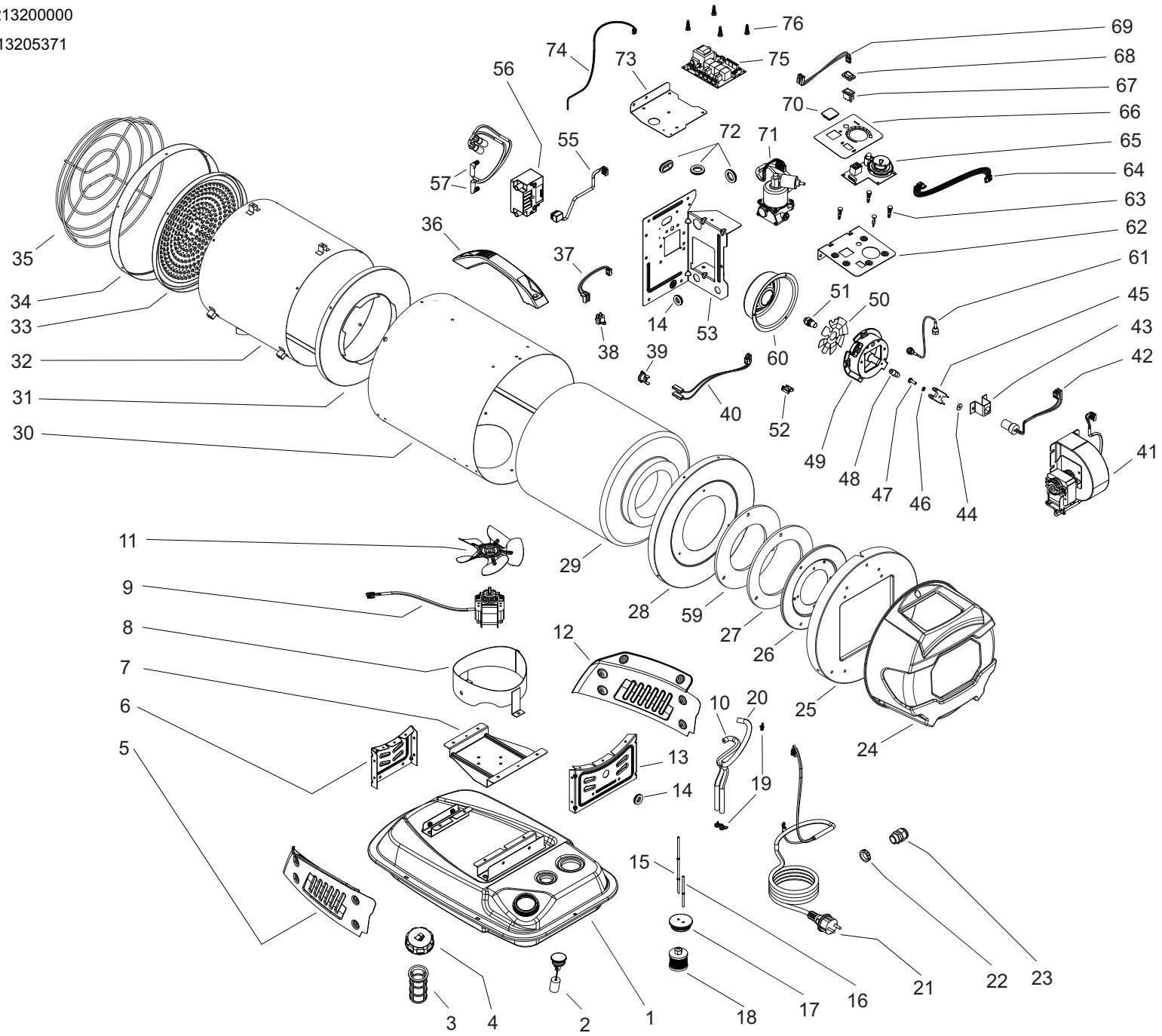

ESP00244

POS.	Code NR	Description	*Rev. Emission - June 2012*
1	4201.000	TANK COMPLETE	
2	4260.006	FUEL GAUGE	
3	4290.026	TANK FILTER	
4	4260.007	COMPLETE TANK CAP	
5	4201.013	LATERAL LEFT PANEL	
6	4201.007	FRONT BRACKET SHELL SUPPORT	
7	4201.064	MOTOR SUPPORT BRACKET	
8	4201.018	COMPLETE CONVEYOR	
9	4260.000	VENTILATION MOTOR WITH CABLE	
10	4201.061	FUEL PIPE IN PUMP-FILTER	
11	4201.065	FAN	
12	4201.011	LATERAL RIGHT PANEL	
13	4201.009	REAR BRACKET SHELL SUPPORT	
14	4290.052	BLACK PVC CABLE FEEDTHROUGH Ø18X2	
15	4201.059	FUEL PIPE IN	
16	4201.060	FUEL PIPE OUT	
17	4201.055	RUBBER BUSH	
18	4290.025	PAPER FILTER	
19	4290.027	CLAMPS HOSE	
20	4201.062	FUEL PIPE OUT PUMP-FILTER	
21	4201.079	POWER CORD	
22	4290.047	LOCKNUT NYLON	
23	4290.046	STRAIN RELIEF BUSHING	
24	4201.049	COVER	
25	4201.077	REAR PLATE COMPLETE	
26	4201.031	FLANGE MOLDED	
27	4201.032	GASKET OF CERAMIC FIBER	
28	4201.082	BOTTOM PLATE	
29	4201.044	CHAMBER INSULATOR	
30	4201.021	SHELL	
31	4201.040	REAR COVER	
32	4201.081	COMBUSTION CHAMBER WITH BRACKET	
33	4201.045	HEATING PLATE	
34	4201.074	FRONT SHELL RING	
35	4201.046	FRONT GRILL	
36	4201.048	PLASTIC HANDLE	
37	4201.080	WIRE SENSOR TILTING	
38	4260.005	ANTI-TILTING SWITCH	
39	4260.011	OVER-HEAT THERMOSTAT 80°C	
40	4201.088	WIRE OVER-HEAT THERMOSTAT	
41	4260.003	MOTOR CENTRIFUGAL COMBUSTION	
42	4201.056	PHOTOCELL	
43	4201.037	PHOTOCELL BRACKET	
44	4290.012	WASHER CERAMIC FIBER	
45	4201.035	BIFILAR ELECTRODES	
46	4290.014	ELASTIC WASHER GROWER	
47	4290.013	SCREW	
48	4290.053	CONNECTION STRAIGHT	

POS.	Code NR	Description	*Rev. Emission - June 2012*
49	4201.033	BURNER HEAD	
50	4201.034	TURBO DISK	
51	4260.001	NOZZLE 0,40 GPH 80° H LE	
52	4290.058	PLASTIC CONDUIT	
53	4201.135	LATERAL PLATE SUPPORT	
55	4260.009	TRANSFORMER CABLE	
56	4260.004	TRANSFORMER	
57	4201.089	HIGH TENSION CABLE	
59	4201.139	GASKET OF CERAMIC FIBER	
60	4201.030	DIFFUSER	
61	4201.052	OIL SUPPLY	
62	4201.078	SUPPORT DISPLAY-BOARD	
63	4290.028	SPACER DISPLAY-BOARD	
64	4201.094	WIRE DISPLAY PC-BOARD	
65	4201.066	DISPLAY BOARD	
66	4201.069	FRONT LABEL	
67	4290.029	ROCKER SWITCH 10A	
68	4290.030	COVER SWITCH	
69	4201.092	WIRE ROCKER SWITCH	
70	4201.068	COVER DISPLAY	
71	4260.002	SOLENOID PUMP	
72	4290.003	CABLE FEEDTHROUGH	
73	4201.027	PLATE SUPPORT	
74	4201.093	WIRE SENSOR TEMPERATURE	
75	4201.051	PC BOARD	
76	4290.021	SPACER PC-BOARD	

RECOMMENDED SPARE PARTS

POS.	Code NR	Description	*Rev. Emission - June 2012*
3	4290.026	TANK FILTER	
9	4260.000	VENTILATION MOTOR WITH CABLE	
10	4201.061	FUEL PIPE IN PUMP-FILTER	
20	4201.062	FUEL PIPE OUT PUMP-FILTER	
29	4201.044	CHAMBER INSULATOR	
38	4260.005	ANTI-TILTING SWITCH	
39	4260.011	OVER-HEAT THERMOSTAT 80°C	
41	4260.003	MOTOR CENTRIFUGAL COMBUSTION	
51	4260.001	NOZZLE 0,40 GPH 80° H LE	
56	4260.004	TRANSFORMER	
65	4201.066	DISPLAY BOARD	
71	4260.002	SOLENOID PUMP	
75	4201.051	PC BOARD	